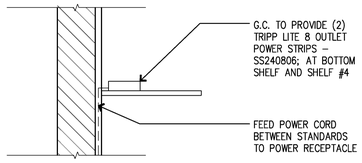

POWER STRIP FEED — SCALE 1" = 1'-0" — 8

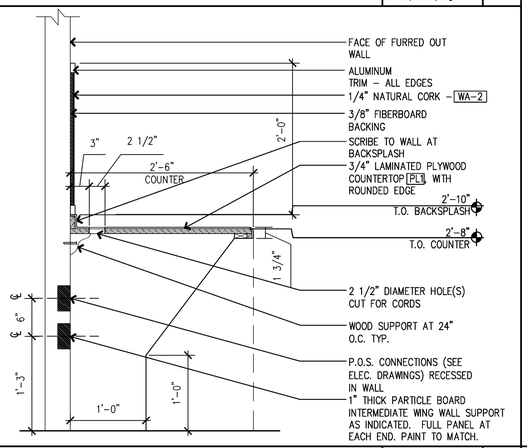

SECTION AT MANAGER'S DESK — SCALE 1" = 1'-0" — 7

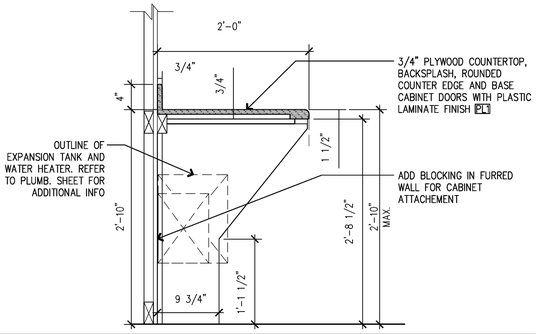

SECTION AT EMPLOYEE COUNTER — SCALE 1" = 1'-0" — 6

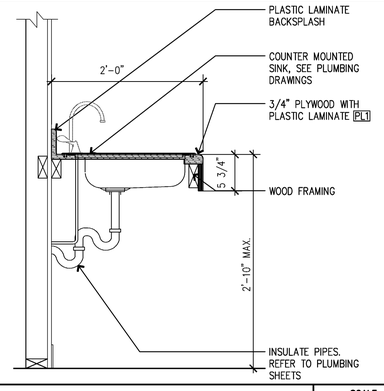

SECTION AT SINK — SCALE 1" = 1'-0" — 5

NOT USED — SCALE – — 3

KEY	DESCRIPTION	REF. SHEET
CONSTRUCTION		
C1	LINE OF STORAGE CUBBY STORAGE	1/A7-2
C2	CEILING MOUNTED UNISTRUT	
FIXTURES		
F1	HDS STORAGE UNITS	A7-3
F2	BIN STORAGE RACK. DO NOT ANCHOR FIXTURE TO WALL BEYOND (MOBILE FIXTURE)	
F3	AS-BUILT DWG TBSE	MEP
F4	STORAGE FOR BAKER'S RACKS, LADDERS AND TABLES	
F5	HIGH CAPACITY HARDWARE STORAGE. ANCHOR ALL (6) CORNERS	5/A7-3
F6	24" DEEP SHELF ABOVE SHIP FROM STORE DESK	
F7	SOAP DISPENSER	
F8	PAPER TOWEL DISPENSER	
F9	DEVIANCE ATTACHED TO SHEET 24" DEEP SHELF BY 8" (2" IN FROM SIDE AND 4" BACK FROM FRONT OF SHELF)	
F10	BOH AND MGR OFFICE SHELVING KIT	
F11	BULLETIN BOARD	
FINISHES		
FN1	90° HIGH S.S. CORNER GUARD @ ALL OUTER CORNERS	
FN2	EXTEND STRIPPING A MIN. OF 4" ON EA SIDE AND A MIN. OF 3'-8" IN FRONT OF EQUIPMENT	8/A7-2
FN3	FLOOR STRIPING	6/A7-2
ELECTRICAL		
E1	CORDLESS PHONE MOUNT @ 48" AFF MAX	ELEC
E2	IT RACK CABINET	ELEC
E3	SUSPENDED FLUORESCENT UTILITY LIGHTS	
E4	OUTLETS/DATA JACKS	ELEC
E5	BUZZER AND 1-STAT BANK	MEP
E6	FIRE ALARM PANEL	ELEC
E7	DRY-TYPE TRANSFORMER ABOVE	ELEC 5/A7-2
E8	POWER STRIP MOUNTED TO BOTTOM SHELF AND SHELF #4	8/–

KEYNOTES — 4

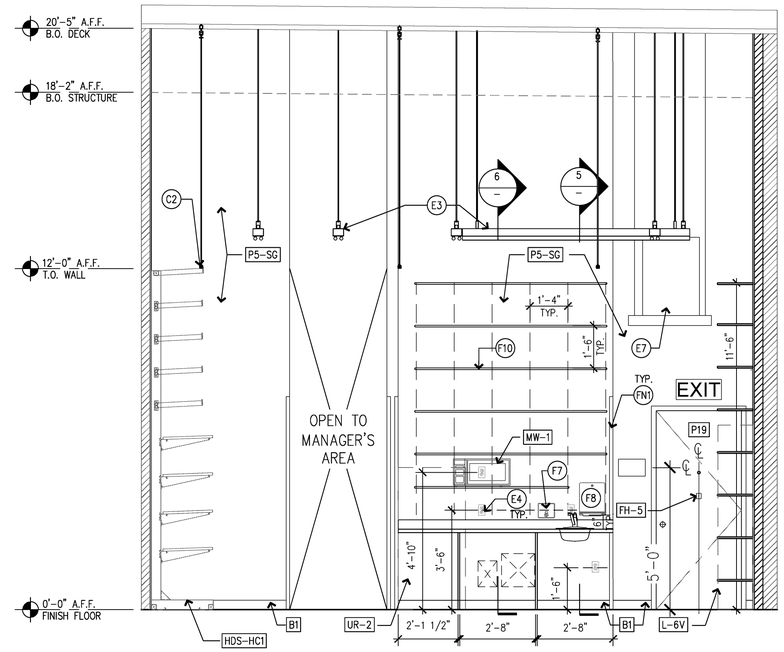

BOH ELEVATION — SCALE 3/8" = 1'-0" — 2

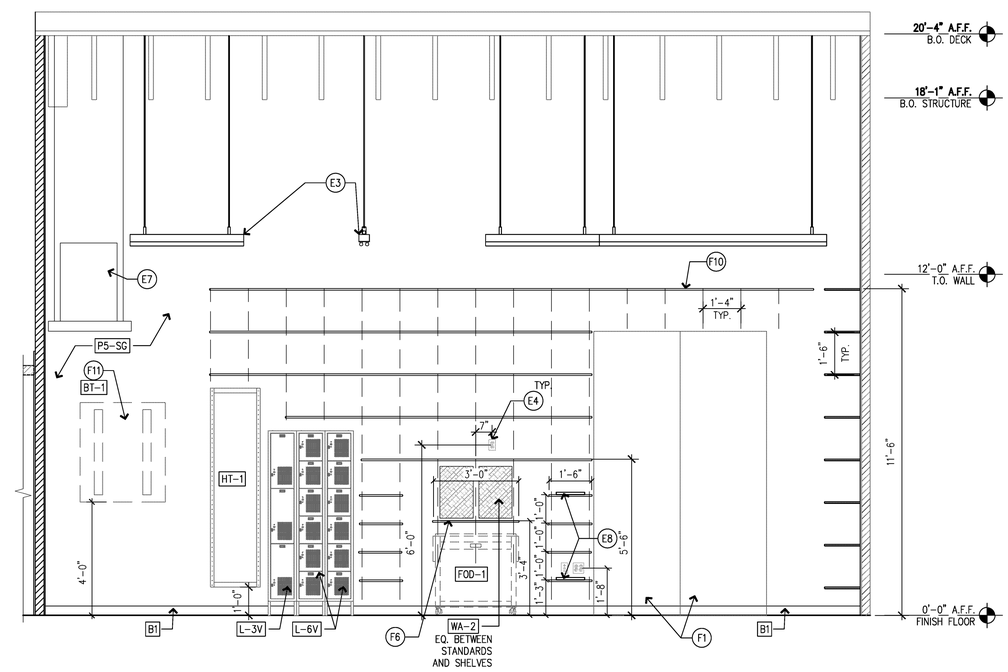

BOH ELEVATION — SCALE 3/8" = 1'-0" — 1

NEW STORE

ATHLETA

GAP INC.
STORE DEVELOPMENT
2 FOLSOM STREET
SAN FRANCISCO, CA 94105

ORACLE I.D.: 140261

STORE NUMBER: 7341

STORE LOCATION: STATION PARK
230 NE PROMONTORY
SPACE C-120
FARMINGTON, UT 84025

DESIGN TYPE:	DERBY B
GENERATION:	21Q34
PROTOTYPE DATE:	1/8/2021
OPENING:	2021

ARCHITECT INFO:

brr

ARCHITECT OF RECORD:

MARIAH MEYER
8131 METCALF AVE
SUITE 300
OVERLAND PARK, KS 66204

www.brrarch.com

TEL: 913-262-9095
FAX:913-262-9044

CONSULTANT INFO:

PROFESSIONAL STAMP:

ISSUE TYPE:

LL/PERMIT/BID:	02/19/21

REVISIONS:

DRAWN BY: KDA

A/E JOB NUMBER: 65011072

TITLE SHEET:

BACK OF HOUSE ELEVATIONS AND DETAILS

SHEET NUMBER: A7-1